REV	REVISION DESCRIPTION	DATE	APPROVAL
A	Note on unused conductor	09-01-15	DDC

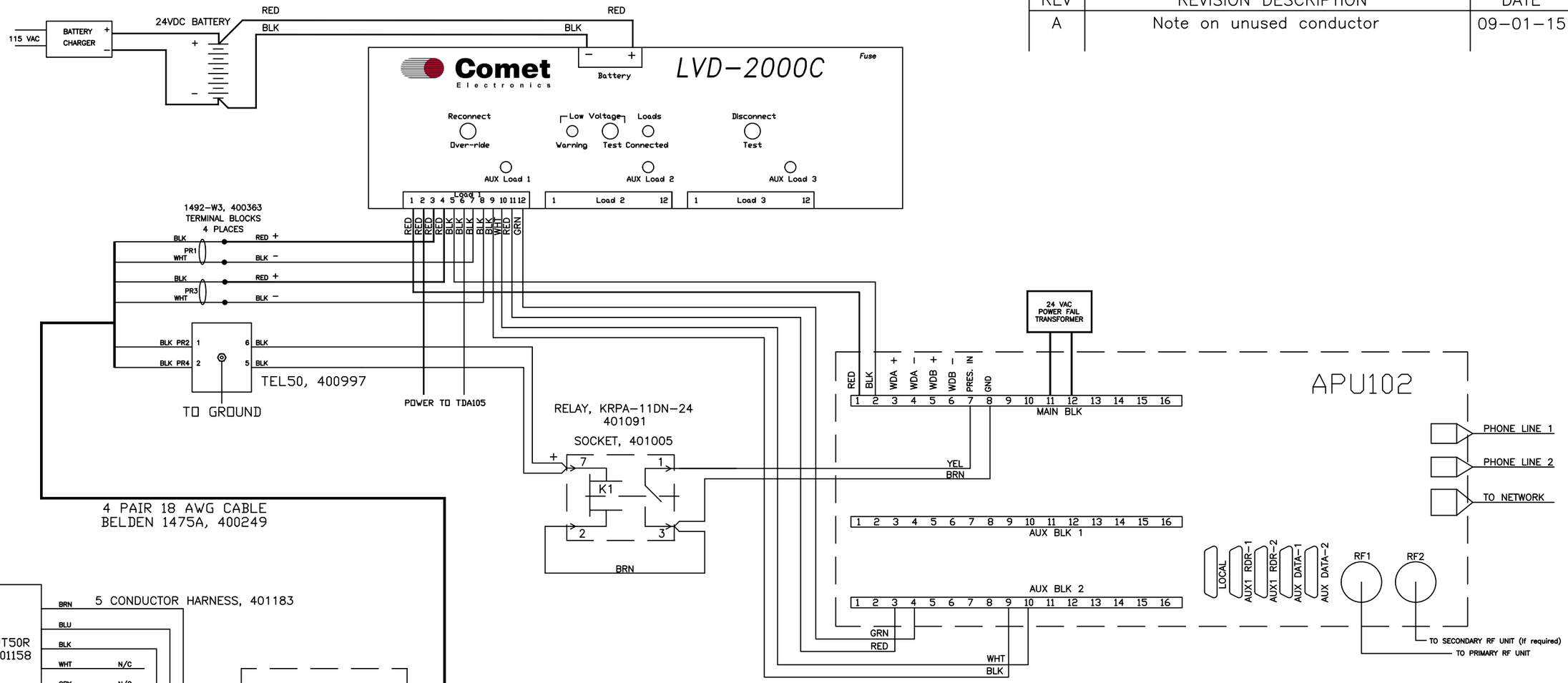

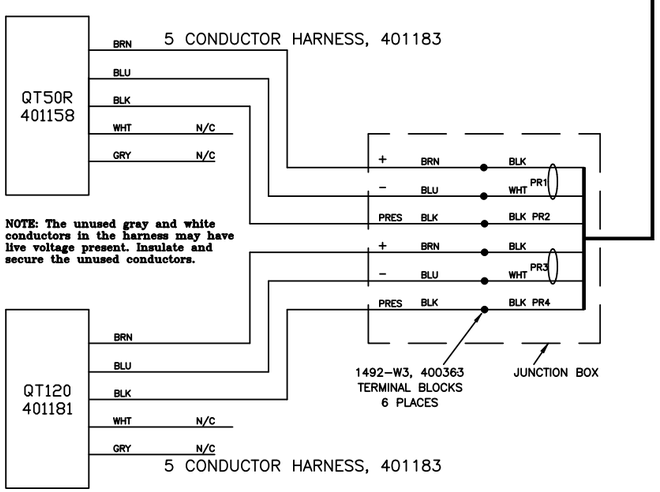

APU102 TERMINAL BLOCK CONNECTIONS

MAIN TERMINAL BLOCK

1	2	3	4	5	6	7	8	9	10	11	12	13	14	15	16
+VDC PWR	-VDC COM	WDA +	WDA -	WDB +	WDB -	PRES IN	GND	PRES OUT	GND	24VAC IN	24VAC IN	REM-LOCK+1	GND	DT PRES. SYNC IN	DT PRES. OUT
										POWER FAIL TRANSFORMER			DOUBLE TRACK		

AUX BLK 1

1	2	3	4	5	6	7	8	9	10	11	12	13	14	15	16
+12 FUSED	+5 FUSED	PROGAMMABLE	GND	WDC +	WDC -	CLOCK SYNC +	CLOCK SYNC -	WATCHDOG PULSE	GND			REM-LOCK+2	REM-LOCK-	Y-EXT	GND

AUX BLK 1 – PIN 3
PROGRAMMABLE AS:
1. CLOCK SYNC INPUT(SECONDARY)
2. EXTERNAL, TIMED PRESENCE(SECONDARY)
3. REMOTE TRACK PRESENCE

LVD2000 USE REQUIRES VIO.CFG FILE WITH DC LOW ALARM CONFIGURED

AUX BLK 2

1	2	3	4	5	6	7	8	9	10	11	12	13	14	15	16
WDD +	WDD -	LVD2000 DC FAIL +	LVD2000 DC FAIL -	TIER 2 ANT 0 +	TIER 2 ANT 0 -	SP IN 0	GND	LVD2000 CONTROL +	LVD2000 CONTROL -	SP OUT 2+	SP OUT 2-	TIER 2 ANT 1 +	TIER 2 ANT 1 -	TIER 2 ANT 0 +	TIER 2 ANT 0 -
				VALID TAG								RF CONTROL			

EXPORT REQUIREMENT NOTICE:
THESE COMMODITIES, TECHNOLOGY OR SOFTWARE WERE EXPORTED FROM THE UNITED STATES IN ACCORDANCE WITH THE EXPORT ADMINISTRATION REGULATIONS. DIVERSION CONTRARY TO U.S. LAW IS PROHIBITED. THE COMMODITIES MAY NOT BE RESOLD, TRANSFERRED, TRANSSHIPPED OR REEXPORTED WITHOUT PRIOR AUTHORIZATION BY THE U.S. GOVERNMENT.

DRAWN DDC	DATE 07-02-15
ENGINEER	DATE
APPROVED SWS	DATE

Comet Electronics
2405 Nicholson Ave.
Kansas City, MO 64120

DWG NAME
BANNER PRESENCE WIRING DETAIL
QT50R and Q120

COMET Proprietary
USE OF THIS DOCUMENT AND INFORMATION IS ONLY GRANTED UNDER CONSIDERATION OF OR USE UNDER CONTRACTUAL AGREEMENT. DOCUMENT IS PROPERTY OF COMET AND MUST BE RETURNED/DESTROYED ON REQUEST.

DWG NO.	PARTS SHOWN	REV
70-0179-01		A

DIMENSIONS:	SCALE	SHEET	OF
IN [mm]	N.T.S.	1	1